SALINA

Famille de spots encastrés downlight pour éclairage d'accentuation en intérieur. L'appareil peut être orienté à 30° verticalement et à 355° horizontalement pour diriger la lumière dans tous les sens. La structure modulaire sépare la lampe en plusieurs parties indépendantes. Les anneaux externes avec diverses finitions sont faciles à monter et peuvent être facilement remplacés pour satisfaire les exigences diverses d'ouverture et les effets esthétiques. Salina est disponible avec plusieurs accessoires d'optique pour satisfaire les différents besoins d'éclairage.

RECESSED TRIMLESS 15° | 2700K

LAMPING

Source	LED
Total power	10W
Emission	direct adjustable 15°
Switching	according to driver
Tension	max 270mA
Color temperature	2700K
Luminous flux	640lm
Initial luminaire efficacy	64lm/W
Initial chromaticity	SDCM<3
Typ CRI	90
Energy class	F
IP class	20
Dimensions	ø7,1x9,5cm
Ambient temperature range	0°C / +35°C
Performance ambient temperature	25°C
Notes	driver and ring not included, orientable spot, trimless recessed hole Ø 77mm, depth 150mm, trim recessed hole Ø 75mm, cable length 0,4m
Accessories	Drivers, Salina | Ring,
Net lamp weight	0,27 kg

Codes
SAL LW2 61

Structure
white

PACKAGE

Package 01 — Dimension: 46x42x22 cm / Gross weight: 0,31 kg

Certificazioni

SALINA TRIMLESS

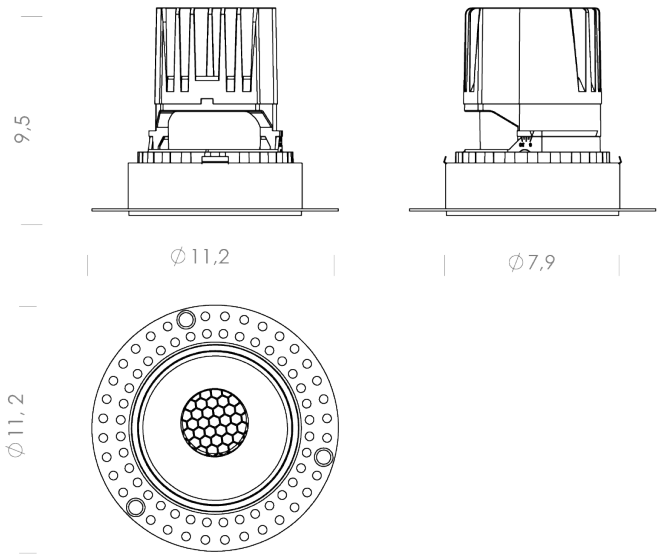

SALINA TRIM

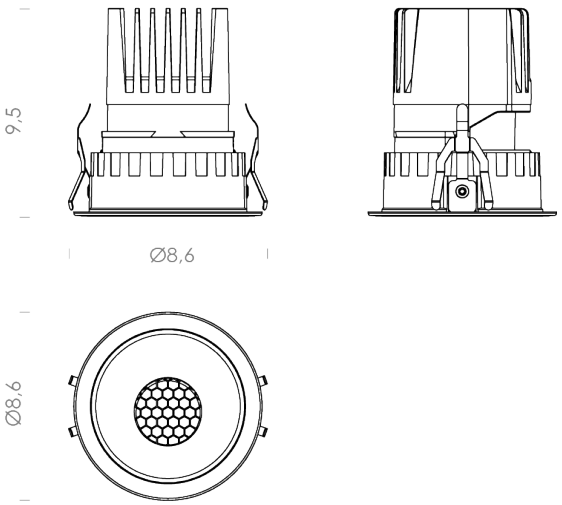

RECESSED TRIMLESS 15° | 3000K

LAMPING

Source	LED
Total power	10W
Emission	direct adjustable 15°
Switching	according to driver
Tension	max 270mA
Color temperature	2700K
Luminous flux	740lm
Initial luminaire efficacy	74lm/W
Initial chromaticity	SDCM<3
Typ CRI	90
Energy class	F
IP class	20
Dimensions	ø7,1x9,5cm
Ambient temperature range	0°C / +35°C
Performance ambient temperature	25°C
Notes	driver and ring not included, orientable spot, trimless recessed hole Ø 77mm, depth 150mm, trim recessed hole Ø 75mm, cable length 0,4m
Accessories	Drivers, Salina | Ring,
Net lamp weight	0,27 kg

Codes
SAL LW3 61

Structure
white

PACKAGE

Package 01 — Dimension: 46x42x22 cm / Gross weight: 0,31 kg

Certificazioni

SALINA TRIMLESS

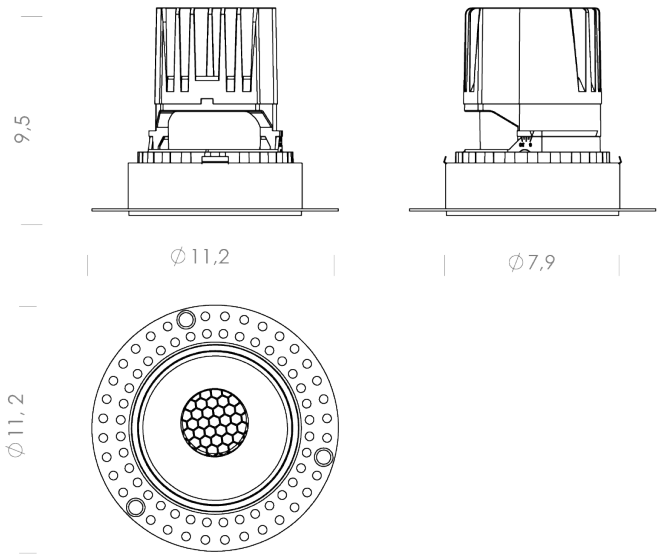

SALINA TRIM

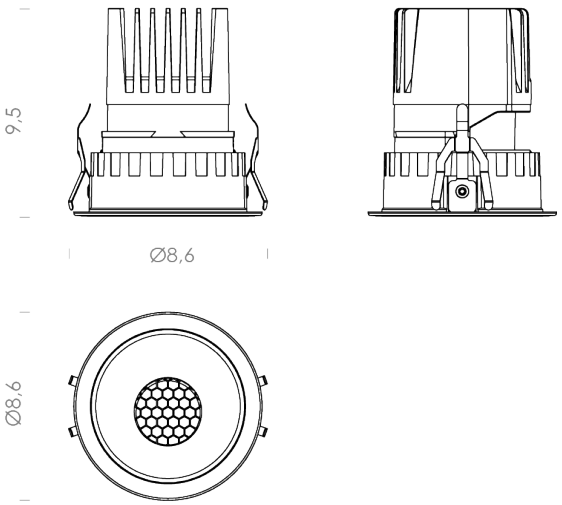

RECESSED TRIMLESS 35° | 3000K

LAMPING

Source	LED
Total power	10W
Emission	direct adjustable 35°
Switching	according to driver
Tension	max 270mA
Color temperature	3000K
Luminous flux	770lm
Initial luminaire efficacy	77lm/W
Initial chromaticity	SDCM<3
Typ CRI	90
Energy class	F
IP class	20
Dimensions	ø7,1x9,5cm
Ambient temperature range	0°C / +35°C
Performance ambient temperature	25°C
Notes	driver and ring not included, orientable spot, trimless recessed hole Ø 77mm, depth 150mm, trim recessed hole Ø 75mm, cable length 0,4m
Accessories	Drivers, Salina | Ring,
Net lamp weight	0,27 kg

Codes
SAL LW3 63

Structure
white

PACKAGE

Package 01 — Dimension: 46x42x22 cm / Gross weight: 0,31 kg

Certificazioni

SALINA TRIMLESS

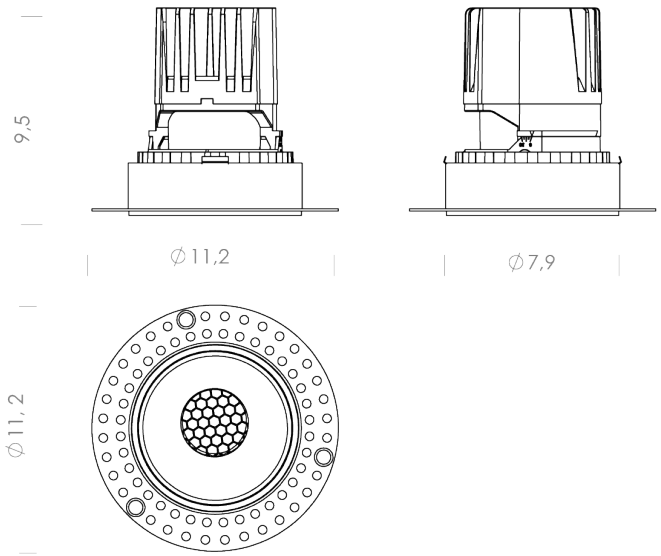

SALINA TRIM

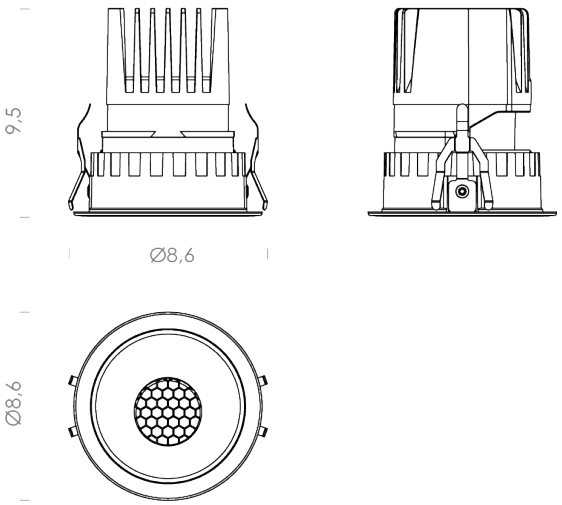

RECESSED TRIMLESS 35° | 2700K

LAMPING

Source	LED
Total power	10W
Emission	direct adjustable 35°
Switching	according to driver
Tension	max 270mA
Color temperature	2700K
Luminous flux	670lm
Initial luminaire efficacy	67lm/W
Initial chromaticity	SDCM<3
Typ CRI	90
Energy class	F
IP class	20
Dimensions	ø7,1x9,5cm
Ambient temperature range	0°C / +35°C
Performance ambient temperature	25°C
Notes	driver and ring not included, orientable spot, trimless recessed hole Ø 77mm, depth 150mm, trim recessed hole Ø 75mm, cable length 0,4m
Accessories	Drivers, Salina | Ring,
Net lamp weight	0,27 kg

Codes
SAL LW2 63

Structure
white

PACKAGE

Package 01 — Dimension: 46x42x22 cm / Gross weight: 0,31 kg

Certificazioni

SALINA TRIMLESS

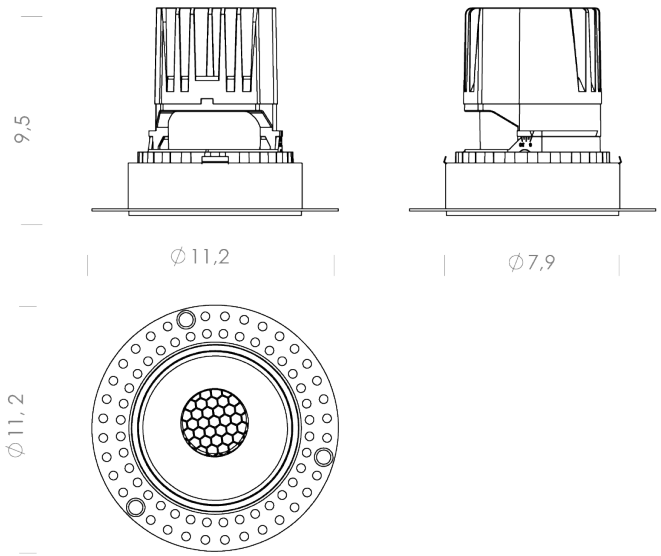

SALINA TRIM

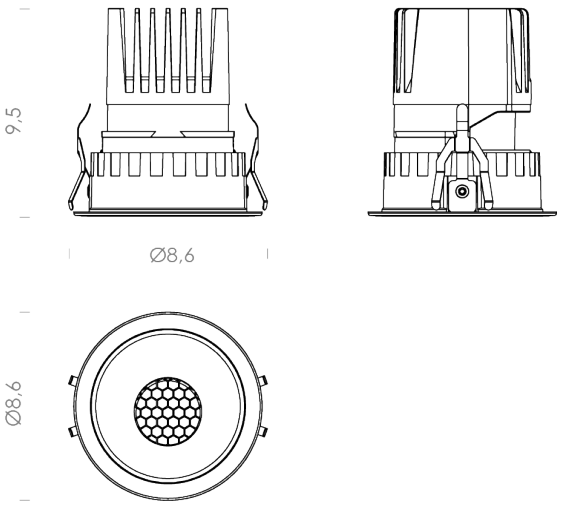

RECESSED TRIM 15° | 2700K

LAMPING

Source	LED
Total power	10W
Emission	direct adjustable 15°
Switching	according to driver
Tension	max 270mA
Color temperature	2700K
Luminous flux	700lm
Initial luminaire efficacy	70lm/W
Initial chromaticity	SDCM<3
Typ CRI	90
Energy class	F
IP class	20
Dimensions	ø7,1x9,5cm
Ambient temperature range	0°C / +35°C
Performance ambient temperature	25°C
Notes	driver and ring not included, orientable spot, trimless recessed hole Ø 77mm, depth 150mm, trim recessed hole Ø 75mm, cable length 0,4m
Accessories	Drivers, Salina | Ring,
Net lamp weight	0,31 kg

Codes	*Structure*
SAT LW2 61	white
SAT LN2 61	black

PACKAGE

Package 01	Dimension: 46x42x22 cm / Gross weight: 0,34 kg

Certificazioni

SALINA TRIMLESS

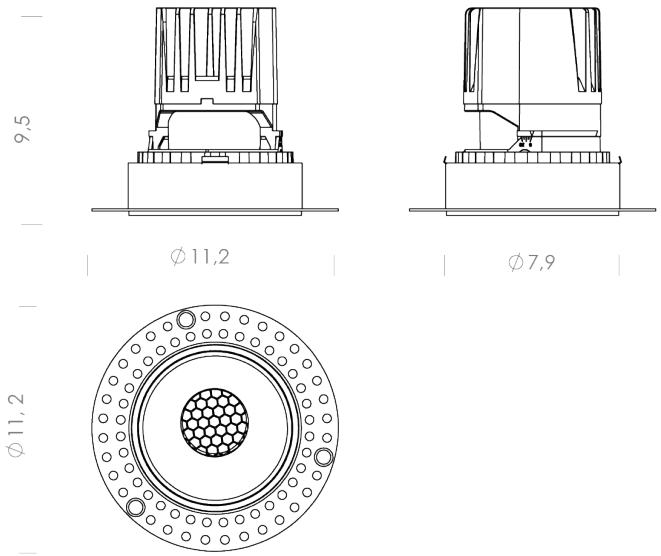

SALINA TRIM

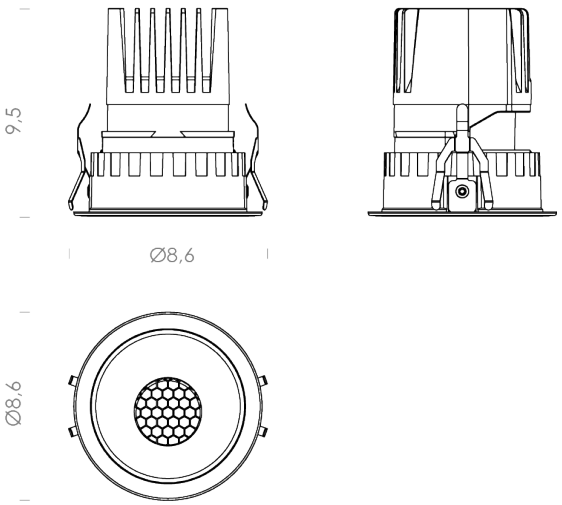

RECESSED TRIM 15° | 3000K

LAMPING

Source	LED
Total power	10W
Emission	direct adjustable 15°
Switching	according to driver
Tension	max270mA
Color temperature	3000K
Luminous flux	740lm
Initial luminaire efficacy	74lm/W
Initial chromaticity	SDCM<3
Typ CRI	90
Energy class	F
IP class	20
Dimensions	ø9x9,5cm
Ambient temperature range	0°C / +35°C
Performance ambient temperature	25°C
Notes	driver and ring not included, orientable spot, trimless recessed hole Ø 77mm, depth 150mm, trim recessed hole Ø 75mm, cable length 0,4m
Accessories	Drivers, Salina | Ring,
Net lamp weight	0,31 kg

Codes	*Structure*
SAT LW3 61	white
SAT LN3 61	black

PACKAGE

Package 01	Dimension: 46x42x22 cm / Gross weight: 0,34 kg

Certificazioni

SALINA TRIMLESS

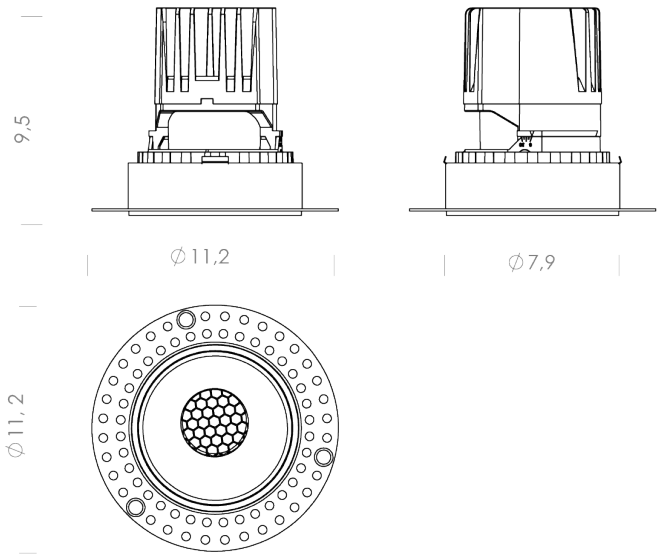

SALINA TRIM

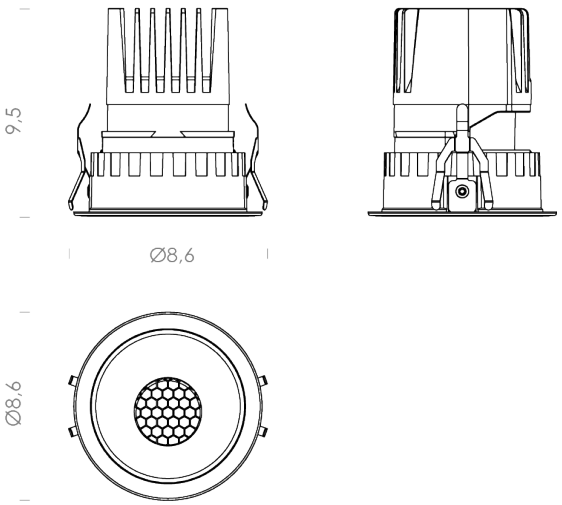

RECESSED TRIM 35° | 3000K

LAMPING

Source	LED
Total power	10W
Emission	direct adjustable 35°
Switching	according to driver
Tension	max 270mA
Color temperature	3000K
Luminous flux	770lm
Initial luminaire efficacy	77lm/W
Initial chromaticity	SDCM<3
Typ CRI	90
Energy class	F
IP class	20
Dimensions	ø9x9,5cm
Ambient temperature range	0°C / +35°C
Performance ambient temperature	25°C
Notes	driver and ring not included, orientable spot, trimless recessed hole Ø 77mm, depth 150mm, trim recessed hole Ø 75mm, cable length 0,4m
Accessories	Drivers, Salina | Ring,
Net lamp weight	0,31 kg

Codes	*Structure*
SAT LW3 63	white
SAT LN3 63	black

PACKAGE

Package 01	Dimension: 46x42x22 cm / Gross weight: 0,34 kg

Certificazioni

SALINA TRIMLESS

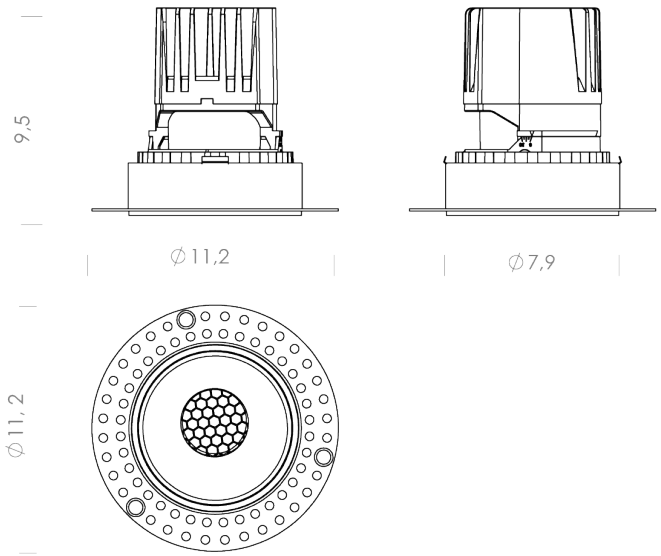

SALINA TRIM

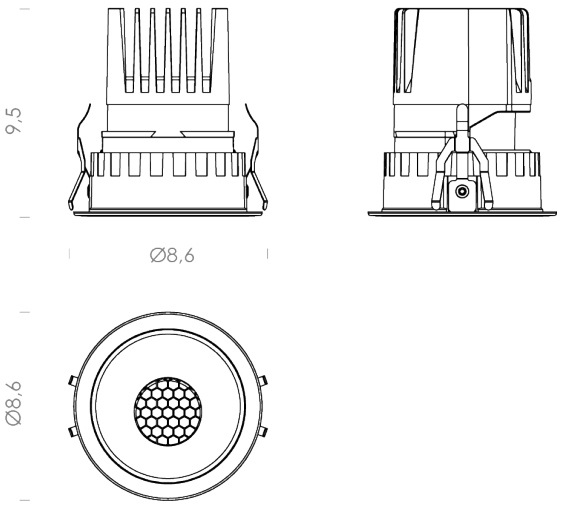

RECESSED TRIM 35° | 2700K

LAMPING

Source	LED
Total power	10W
Emission	direct adjustable 35°
Switching	according to driver
Tension	max 270mA
Color temperature	2700K
Luminous flux	670lm
Initial luminaire efficacy	67lm/W
Initial chromaticity	SDCM<3
Typ CRI	90
Energy class	F
IP class	20
Dimensions	ø9x9,5cm
Ambient temperature range	0°C / +35°C
Performance ambient temperature	25°C
Notes	driver and ring not included, orientable spot, trimless recessed hole Ø 77mm, depth 150mm, trim recessed hole Ø 75mm, cable length 0,4m
Accessories	Drivers, Salina | Ring,
Net lamp weight	0,31 kg

Codes	*Structure*
SAT LW2 63	white
SAT LN2 63	black

PACKAGE

Package 01	Dimension: 46x42x22 cm / Gross weight: 0,34 kg

Certificazioni

SALINA TRIMLESS

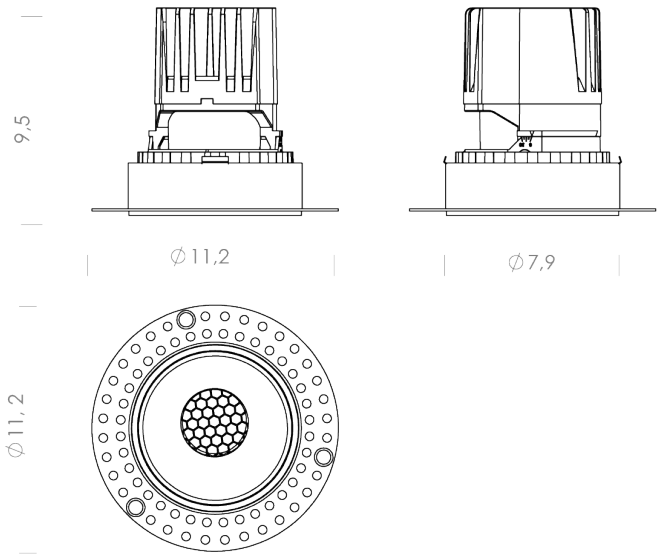
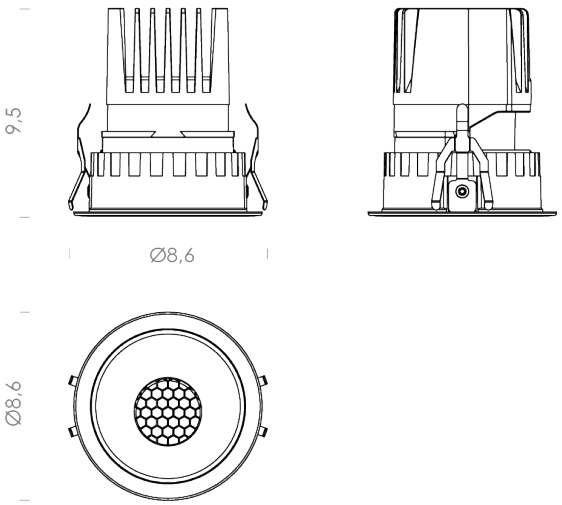
SALINA TRIM